DBPOWER
www.dbpower.co.uk

100PSI Portable Car Tire Inflator

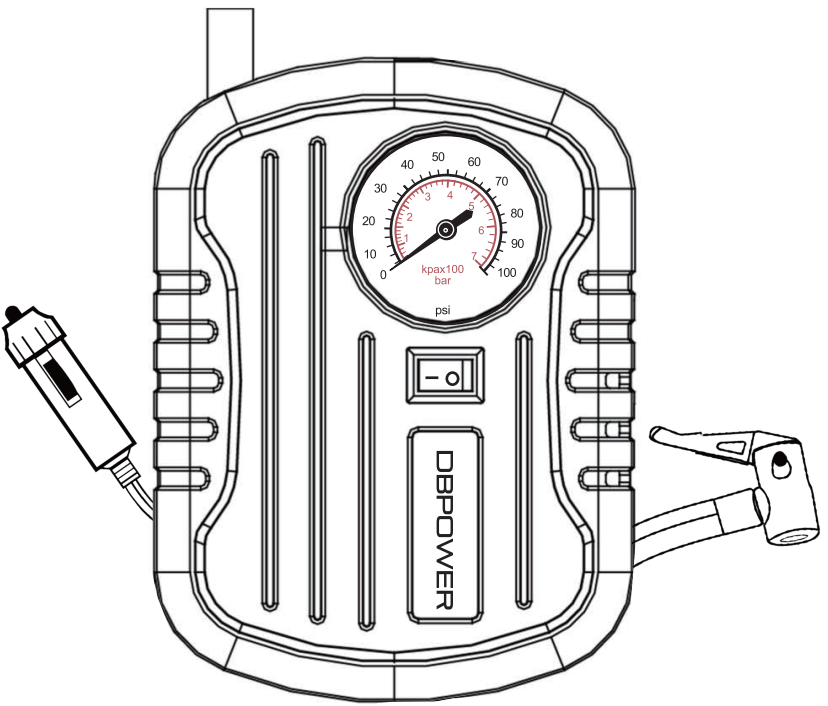

User Manual

Introduction

This portable air compressor is a multi-functional unit primarily designed to inflate vehicle tires, but can also be used to inflate other items such as sports balls, air beds etc.
The main features are:
1. The Tire Inflator is compact with easy storage. Easily to hold with one hand.
2. Three additional High-air flow nozzles & adaptors for use on other inflatable items.
3. Max Pressure: 100 PSI

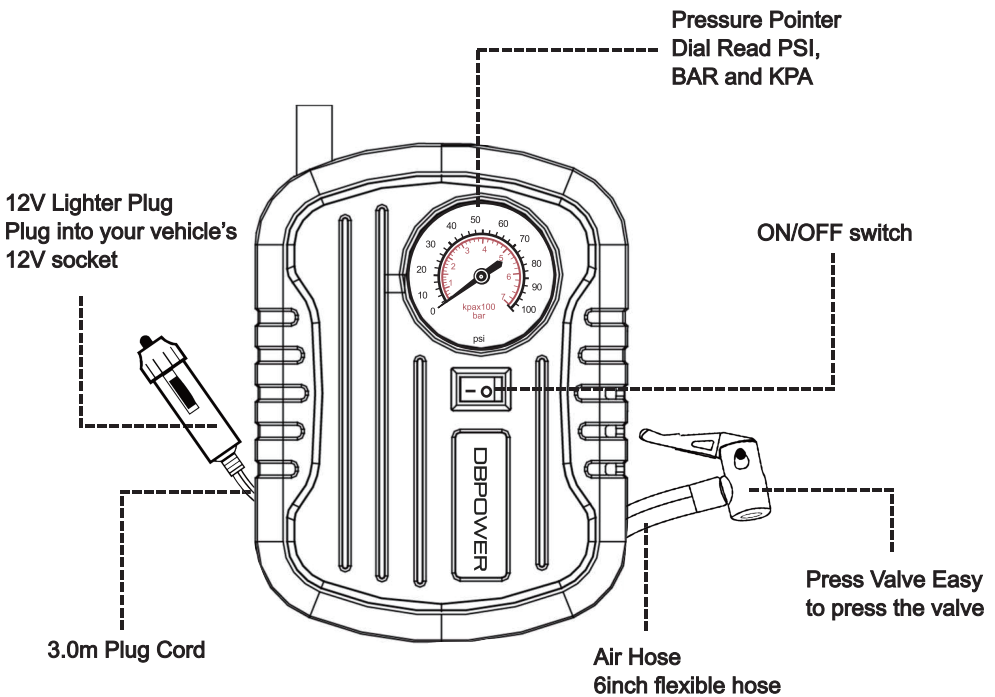

Safety

Please read instructions carefully before use.

- Remember to manually turn off the tire inflator once desired pressure has been reached.
- Inspect the air compressor before each use, ensuring there is no damage to the cord, valve or any other components.
- Avoid using in rainy or wet conditions as water entering the unit can cause internal damage and premature failure.
- Keep the power cord in good condition, i.e. avoid heat, sharp edges and do not lift the compressor by the cord.
- In case of an electrical or mechanical fault, immediately switch off and unplug the compressor.
- Do not bend or restrict the air hose while the compressor is in use.
- The compressor should not be used for more than 10 minutes at any one time. If using for extended periods give the compressor a 15 minute break allowing for it to cool down.
- For safety reasons the compressor should not be left running unattended.
- Please refer to your vehicle handbook for the correct tire pressure required for your vehicle.
- When using on other inflatable items such as sports ball, bike tires, air beds etc. take extra care not to over-inflate.
- Store the compressor in a safe and dry place when not in use. Only use on tires and inflatable items.
- KEEP OUT OF REACH OF CHILDREN.

Technical specifications

Power Input	DC 12V
Full Load Current	4A
Maximum Pressure	100PSI
Tested Standard Pressure	40PSI
Continuous Working Hours	15mins
0~42PSI Working hours	7mis
Operation Temperature	-10ºC - 50ºC
Pressure Gauge	Pointer Dial, Readings in PSI, BAR and KPI
Air Hose Length	150mm
Dimensions	125×93 ×45 mm
Cigarette Lighter Chord	3.0m
Net Weight	0.42kg
Accessories	3 High-air flow nozzles & adaptors

User guide

Please ensure that all safety instructions are read and observed before operating the compressor. Failure to read may result in physical injury, damage to property or the compressor itself being damaged.

1. As the compressor uses power from the vehicles battery, should there be any doubt of the condition of your battery we would recommend you start and run your vehicle beforehand where it is safe to do so. This is especially important on smaller vehicles that are used less frequently.
2. Carefully uncoil the power cable on the compressor and insert the 12v DC plug into the 12V cigarette socket in the vehicle.
3. Remove the dust cap from the tire valve.
4. Carefully plug the air hose in the tire valve. Once hearing the sound of leaking, press the wrench 90 degrees inward until the air is no longer leaking.
5. Switch the “-/o” button to start the air compressor. Once the desired pressure has been met, manually turn off the tire inflator by switch “-/o” button.
6. Carefully unplug the 12V DC plug from the car cigarette lighter. Wrap up the power cord and air hose before putting the compressor back in its original box.

Operation sequence

When inflated, Please first connect the 12V cigarette socket in the vehicle to power the compressor, and then connect the valve to the tire inflatable.
When finished, firstly switch off the air compressor, then disconnect the valve connection, and then disconnect the cigarette socket.

The Operation sequence can't be reversed.

Note

1. Check your tire pressure periodically to ensure it remains at the correct level.
2. When starting, if the PSI value rises rapidly (490 KPA in two or three seconds), it means that the air is blocked and does not enter the tire. The power must be switched off, then remove the air nozzle and connect the inflator again. Otherwise the motor will be damaged.
3. This tire inflator can not be used for large and super heavy vehicle tires.

4. This tire inflator is limited to the use of 12V DC power supply, can not use 110V household electricity. If you need to use household electricity, it must be coupled with the transformer.
5. When finishing inflating, the wrench must be straightened to avoid damaging the elasticity of the rubber inside.

Environment protection

Electric appliances are recyclable and should not be discarded in the domestic waste. Please ensure that they are taken to your local recycling center, if possible, where they can be disposed of in the correct manner.

Other inflatables

Please ensure that extra care is taken when using on other inflatables to avoid damaged to your items. CAUTION: soft inflatables may not have a maximum pressure stated on them. Start by using a low setting to avoid bursting or damaging items.

1. For other inflatables, use the adaptors that you will find on the rear of the unit.
2. Select the suitable adaptor and plug the air hose connector in the compressor.
3. Attach the connector to your inflatable item and follow steps 4-8 in the user guide.

Troubleshooting

Compressor does not start

1. Ensure the plug is pushed firmly into the 12V socket.
2. Check if your vehicle requires the ignition to be turned on for the socket to be powered up.
3. Check that any obstructions such as dirt have not built up in the plug or the cigarette lighter.
4. Check the vehicle cigarette socket fuse.
5. Any other problems, please contact us at: service@dbpower.co.uk.

Compressor runs but does not inflate or inflates slowly

1. Ensure that the connecting hose is firmly screwed on to the valve.
2. Check the air hose and/ or adaptors have no leaks.
3. Allow 15 minutes cooling time if the compressor has been used for more than 10 minutes.
4. Check the condition of your vehicle battery as voltage could be too low.
5. Any other problems, please contact us at: service@dbpower.co.uk.

For your reference

For the specific pressure, please kindly refer to your product user manual

Car	30-35PSI
Mountain Bike	35-50PSI
Road Bike	90-100PSI
Football	13PSI
Basketball	9PSI
Volleyball	5PSI

PSI	KPA	BAR
10	68.9	0.69
20	137.9	1.38
30	206.8	2.07
40	275.8	2.76
50	344.7	3.45
60	413.7	4.14
70	482.6	4.83
80	551.6	5.52
90	620.5	6.21
100	689.5	6.9
120	827.4	8.27

Note:
This device complies with Part 15 of the FCC Rules. Operation is subject to the following two conditions: (1) this device may not cause harmful interference, and (2) this device must accept any interference received, including interference that may causeundesired operation.

MADE IN CHINA